PTZ-SDI6 Intelligent IR Infrared High Speed Dome

User Manual

Thank you for purchasing our products . Please do not hesitate to contact us if there is any question.

Please read this manual careful before installation or application

（Note：This manual is subject to change without notice）

Contents

Note 1: The key "IRIS+" mentioned in this manual is equal to "OPEN", and "IRIS-" is equal to "CLOSE"; "PRESET" is equal to "SET" (i.e., to edit preshot, while" PREVIEW" is equal to "ACK" (i.e., call preshot); "**FOCUS-" is equal to " FAR".**

Safeguards:

This is to assure the right application of this product and to avoid danger or property loss. The precaution measures are divided into “Warnings” and “Cautions”, as shown in the following picture;

Warnings: Ignorance of Warnings may cause serious injury or death

Cautions: Ignorance of Cautions may cause injury or property loss.

Warning Follow this safe guard to avoid serious injury or death	Caution Following this precaution to avoid potential injury or property loss

Warning

1、 All the national and regional electrical safety regulations must be strictly followed during the installation and application of this product.

2、 Please use standard power adapter AC24V/3A.

3、 Do not connect several devices to one power adapter, as adapter overload may cause over-heat or fire hazard.

4、 Please disconnect power during wiring and disassembling. Operation is not allowed when connected to power.

5、 When the product is installed on wall or ceiling, the devices should be firmly fixed.

6. If there is smoke, severe smell or noise in the dome, turn off the power and disconnect the cable immediately, then contact our after-sales staff.

7. If the product does not work properly, please contact your dealer of our after-sale service center。Never attempt to disassemble the camera yourself.

（We shall not assume any responsibility for problems caused by unauthorized repair or maintenance.）

Cautions

1、 Do not drop the dome or subject it to physical shock, and do not expose it to high electromagnetism radiation. Avoid the equipment installation on vibrating surface or shocking places(ignorance can damage the equipment).

2、 Do not install the dome in extremely hot(over 60℃)or cold(below-40℃) or damp locations.

3、 Indoor domes should be kept away from rain and moisture.

4、 Avoid direct contact with the dome cover when opening it, as the acidic sweat of the fingers may erode the

surface coating of the dome cover. Scratch on dome cover by hard objects may cause unclear image.

5、 Please use a soft and dry to clean inside and outside surfaces of the dome cover, do not use alkaline detergents.

1.1 Product Introduction

For this series of dome cameras, the 32-bit ARM processor, built-in zoom lens and the decoder controller are used together. It's driven by precise stepper motor, and thus responsive, stable, and trembling-free at any speed. The excellent performance and complete functions has made it a high-tech security product.

1. 2 Appearance

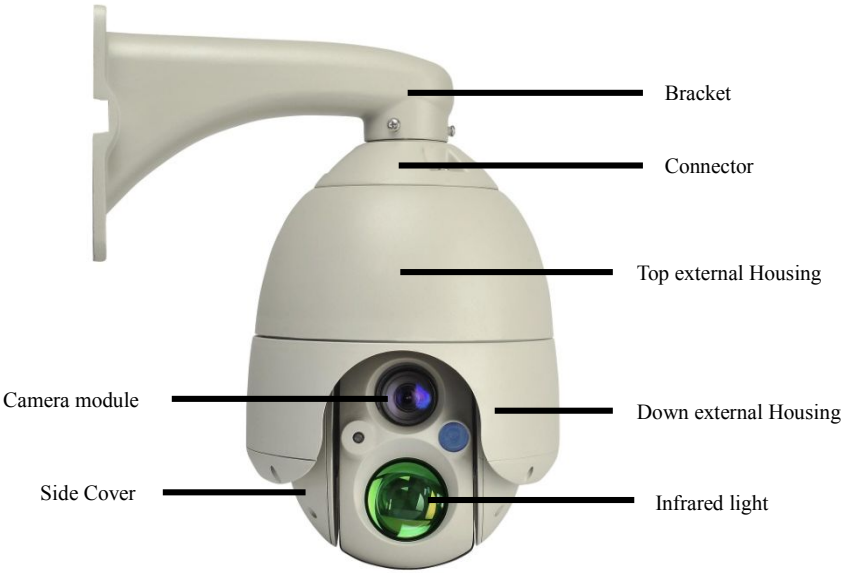

1.3 Functions

- Aluminum-alloy housing, 6-inch dome cover, black rotating dome, integrated design
- Ceiling-mount, wall mount, pending (indoor/outdoor) bracket available
- Precise stepper motor driven, smooth and tremble-free rotation, noise-free
- 32-bit ARM processor, large storage capacity, higher speed, better performance, higher integration, lower consumption
- Can restore factory default settings
- Simultaneous zoom and speed limit
- Color/ B/W can be set to be Color, B/W, or Auto
- 6 PTZ Pattern：can record all P/T/Z tour

- Automatic changing of P/T speed: the P/T speed reduces proportionally according to zoom times.
- 128 presets, accuracy less than 0.1°（the dome targets a specific location, can be set and changed
- 16 presets in each tour: dwell time 1-99 seconds at each preset position settable in OSD menu
- Pan 360°endless， Tilt 0---90°
- Pan manual speed: 0.1°～1 8 0°/S, Tilt manual speed：0.1°～1 2 0°/ S
- 3 degrees of lightning and surge protection
- With IP66, CE, FCC and ROHS

1.4 Technical Data

Items	Model Name	
	PTZ-SDI630W 30X	PTZ-SDI620W 20X
Sensor	1/2.8″SONY CMOS	1/3" SONY CMOS
Effective Pixels	200k Pixels	
Min. Illumination	Color: 0.3 lux/F1.2 B/W:0.1 lux/F1.2	Color: 0.2 lux/F1.6 B/W:0.1 lux/F1.6
Optical Zoom	30X f=4.3mm~129mm	20X f=4.7mm~94mm
Digital Zoom	12	NO
White Balance	AUTO/Outdoor/Indoor/ATW/Manu al	AUTO//Manual/ Indoor/Outdoor
Privacy Zone Masking	24 Groups	NO
resolution output	720P/25 frame ,720P/30 frame,720P/50 frame ,720P/60 frame 1080i/ 50frame,1080P/25 frame,1080P/30 frame,	720P/25 frame ,720P/30 frame, 1080P/25 frame,1080P/30 frame,
D/N	ICR	

Processor	32-bit ARM
Synchronous zoom	IR lamp zoom in and out synchronously with zoom lens
IR light Source	Varical focal IR-Ⅲ generation
IR Wave Length	850nm
IR Control	Auto/Manual
IR life	more than 20,000 hours
IR angle	7° ～40° and 60°
Address	0----255
Pan Range	360°Endless
Pan Speed	0.1°/S－180°/S（1-64 degree optional）
Tilt Range	0-----90°
Tilt Speed	0.1°/S－120°/S
OSD Menu	English
PATTERN	6 Groups
Preset tour	7 Groups
2-Point Auto Scan	Yes
Horizontal 360 °Scan	Yes
Preshot	128
Preshot Speed	240°/S
Temperature	-30℃-+60℃
Humidity	≤95% No condensation
Communication	RS485 BUS
Baud Rate	2400 / 4800 / 9600 /19200bps Optional
Input Power	AC24V/3A
Consumption	36W
Video Out	HD-SDI
Weight	6.5Kg
Installation	Ceiling Mount, Pendant Mount, Bent Pipe etc. (Optional)
Certificates	**IP66， ROHS， CE，FCC**

1.5 Short-cut Commands (for board camera, takes Sony 20X as example)

PREVIEW/ **PRESET**	**No**	**Functions**	Remark
PREVIEW	65	Camera Power ON	
PRESET		Camera Power OFF	
PREVIEW	66	BLC ON	
PRESET		BLC OFF	
PREVIEW	67		
PRESET		ICR Color	
PREVIEW	68	ICR B/W	
PRESET		Camera Reset	
PREVIEW	69	Camera menu	
PRESET		Screen ON /OFF	
PREVIEW	70	Digital Zoom ON	
PRESET		Digital Zoom OFF	
PREVIEW	71	Auto Focus	
PRESET		Manual Focus	
PREVIEW	72	Auto Iris	
PRESET		Manual Iris	
PREVIEW	73	White Balance Auto	
PRESET		White Balance Manual	
PREVIEW	74	Indoor Mode	
PRESET		Outdoor Mode	
PREVIEW	75	ATW	
PRESET		one push WB	
PREVIEW	76	Image Freeze ON	
PRESET		Image Freeze OFF	
PREVIEW	77	1080I/60	
PRESET		720P/60	
PREVIEW	78	1080I/50	

PRESET		720P/50	
PREVIEW	79	1080P/30	
PRESET		720P/30	
PREVIEW	80	1080P/25	
PRESET		720P/25	
PREVIEW	81	Home Position in 10 second	
PRESET		Home Position in 30 second	
PREVIEW	82	Home Position in 60 second	
PRESET		Home Position in 120 second	
PREVIEW	83	Home Position in 180 second	
PRESET		Home Position OFF	
PREVIEW	84	Run 2-Point Scan	
PRESET			
PREVIEW	85	1080P/60 frame	Reserved
PRESET		1080P/50 frame	Reserved
PREVIEW	86		Reserved
PRESET			Reserved
PREVIEW	87		
PRESET		Set start position of 2-point scan	
PREVIEW	88		Reserved
PRESET			Reserved
PREVIEW	89		Reserved
PRESET			Reserved
PREVIEW	90	2-point scan big circle mode(> 180°	
PRESET		2-point scan big circle mode(< 180°)	
PREVIEW	91		Reserved

PRESET			Reserved
PREVIEW	92	Run Auto Scan	
PRESET		Dome information display	
PREVIEW	93	Run 16 preshots	
PRESET		Restart	Press PRESET 93 three times continually
PREVIEW	95	Open OSD Menu	
PRESET			
PREVIEW	103		IR light Auto
PRESET			IR light ON
PREVIEW	104		IR light OFF
PRESET			Reserved
PREVIEW	108	cruise time set	first call+(1---10) preset,and call+108(save standing time),such as :call+2 one time,and call+108 one time,so cruise standing time is 2S; call+10 one time,and call+108 one time,so crusie standing time is 10S
PRESET			
PREVIEW	109	Clear Memory	Press PREVIEW 109 once，then press PRESET 109 twice，and press PREVIEW 109 once
PRESET			
PREVIEW	110	Return to factory setting	Press PREVIEW 110 once，then press PRESET 110 twice，and press PREVIEW 110 once
PRESET			

1.6 Glossary

General Address

Address 0 is the general address, which means the controlling devices can control any dome in a system by this address, no matter what the current dome address is.

Proportional Pan/Tilt Speed

Proportional pan/tilt automatically reduces or increases the pan and tilt speeds in proportion to the amount of zoom. The dome slows down at a larger amount of zoom, and it speeds up at a small amount of zoom.

AUTO Pan SCAN

The dome rotates horizontally 360º continually at a set speed in the set direction. User can also set the starting

and ending position, between which the camera can move back and forth**.**

Two-point PAN SCAN

The domes moves horizontally from the starting point to the ending point at a set speed in the set direction.

PRESET (PRESHOT)

Each of the user-definable presets can be programmed to use pan, tilt, camera settings and other settings. When preset is called, the dome will automatically move to the defined position. User is allowed to add, modify, delete and call each preset.

PRESET TOUR (Vector Scan)

The dome will moves the continually from the 1st preset to the 16th. If one preset is not set, it skips and moves directly to the next preset.

IR Cut Filter

The IR cut filter can be set to Auto, Day and Night**.** In auto mode, the camera is capable of automatically switching Black & White mode (Night) and Color mode (Day) with regard to environment lightening conditions. In manual switch mode, user can increase sensitivity in low light conditions by switching to Black & White mode, while the Color mode is preferred in normal lighting conditions (depends on the camera).

Auto Focus

The auto focus enables the camera to focus automatically to maintain clear video images

User can also press FAR and NEAR to focus. It will resume auto focus when user does P/T/Z controlling.

Auto Iris

The auto iris enables the camera to iris automatically to maintain clear video images

User can also press OPEN and CLOSE to focus. It will resume auto iris when user do P/T/Z controlling.

Backlight Compensation

When there is bright light source in the background, the subject will be dark, like a black shadow. Backlight compensation video gain done either manually or automatically to correct the exposure of subjects that are in front of a bright light source, avoid unclearness of the target in bright background.

Chapter 2 Precautions to Installation

2.1 Preparation

2.2 Precautions to Installation

2.1 Preparation

1. Regulations

1）All electrical safety and fire regulations should be strictly followed.

2）Please check if your camera and accessories are all included in the product package, make sure the location is suitable for installation and application of the dome, as specified in the manual.

2. Location checking

Make sure there is enough space for the dome and accessories in the chose location.

3. Check the supporting strength of the chose location

Make sure the ceiling or wall where the dome will be installed is strong enoPTZ-SDIh to support 4 times of the weight of domes and its accessories.

4. Preparing of cables

Select video cable according to required transmitting distance. Basic requirements of coaxial cable:

1）75Ω;

2）Brass cable;

3）95% copper braid, tinned

2.2 Precautions to Installation

1. Read this manual carefully before installation.
2. The power supply and the voltage should be the same as indicated on the cable. Standard voltage is AC24V, the voltage should be within AC24V±10%.Long-time working of dome under too low or too high voltage will cause abnormal working. Keep the power consumption above 40W, otherwise, the restart or controlling of dome will be abnormal.
3. Continuing exposure of camera to strong light will damage CCD and result in bad image or no display.
4. The outdoor dome is water-proof as well as moisture resistant (IP66). If the dome is wired improperly, the rain will enter the dome along the cable, thus damaging the circuit board and even the camera. The right and wrong wiring are shown in the following pictures:

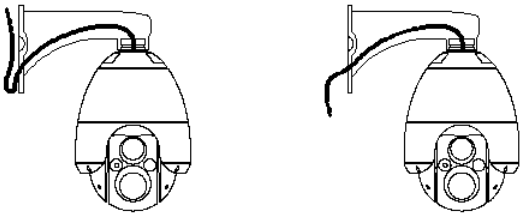

Right Wiring

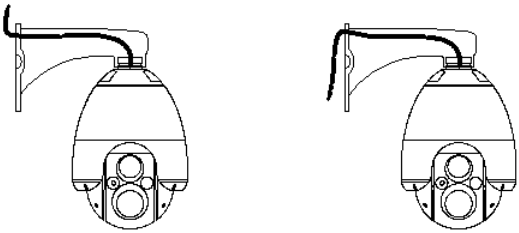

Wrong Wiring

Chapter 3 Installation

3.1 Package Checking

3.2 Installation

3.3 Dip Switches (Dome Address, Protocol and Baud Rate)

3.1 Packing checking

Please check if your camera and accessories are all included in the product package:

Packing list of wall mount speed dome (indoor/outdoor):

1. Integrated Camera
2. Bracket
3. Power Supply
4. Screw Pack
5. User Manual
6. Quality Certificate
7. Warranty Card

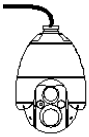

Integrated Camera

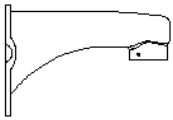

Bracket（Optional）

Power Supply（Optional）

Screw Pack

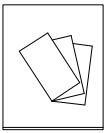

User Manual

Note：Non-original packing material may cause damage in transportation and cost extra charge.

3.2 Installation

3.2.1 Install the bracket，run the BNC cable through the bracket (see following picture). Please refer to Chapter 4 for installation of different brackets.

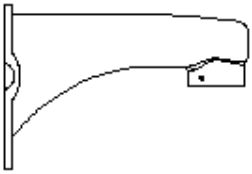

3.2.2 For wall mount bracket, get out the upper housing from the carton and install it with the bracket. Please wrap the connecting part between the upper housing and the bracket with teflon tapes (see following picture) to make it water proof if it’s an outdoor camera.

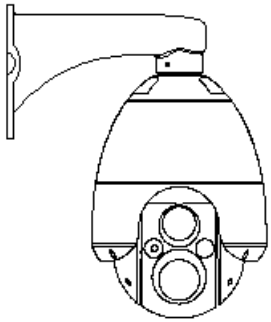

3.2.3 Wire of camera is shown as follows：

3.2.3.1 one-dome device connection

The one-dome device connection allows the user learn the wiring quickly, and also makes the installation, adjusting, testing and exhibition easier. Read the below chart carefully for connection when you use the apparatus for the first time. Any wrong wiring may cause permanent damage or damage to other equipments.

Following are 3 connection methods, for users'reference:

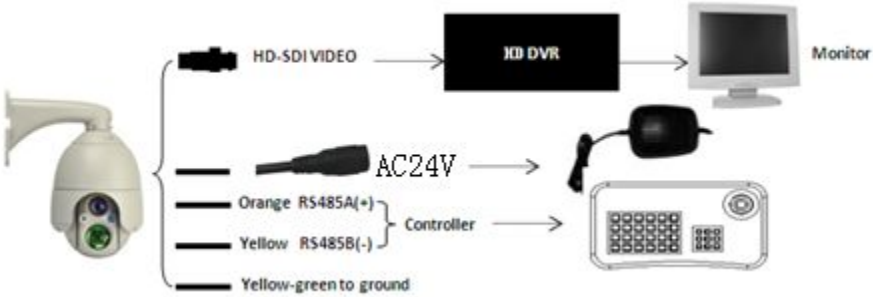

Caution: No operation is allowed when dome is powered-up.

3.2.3.2 Multi-dome device connection.

When connecting many dome devices together, the user can embed multi-device system with auxiliaries such as arrester device, video matrix, DVR and alarm box for system integration.

AC24V: Power supply of dome device, which will convert AC220V/50HZ input to AC24 output and supply to the dome device.

RS-485 Bus: It is for the control signal（RS-485 signal） output of controller, connecting to the communication input terminals of control cable of each dome device.

Video: It is for image signal output of dome device, (can directly output to video equipment such as monitor or video matrix. Take care of the match up of impedance.）

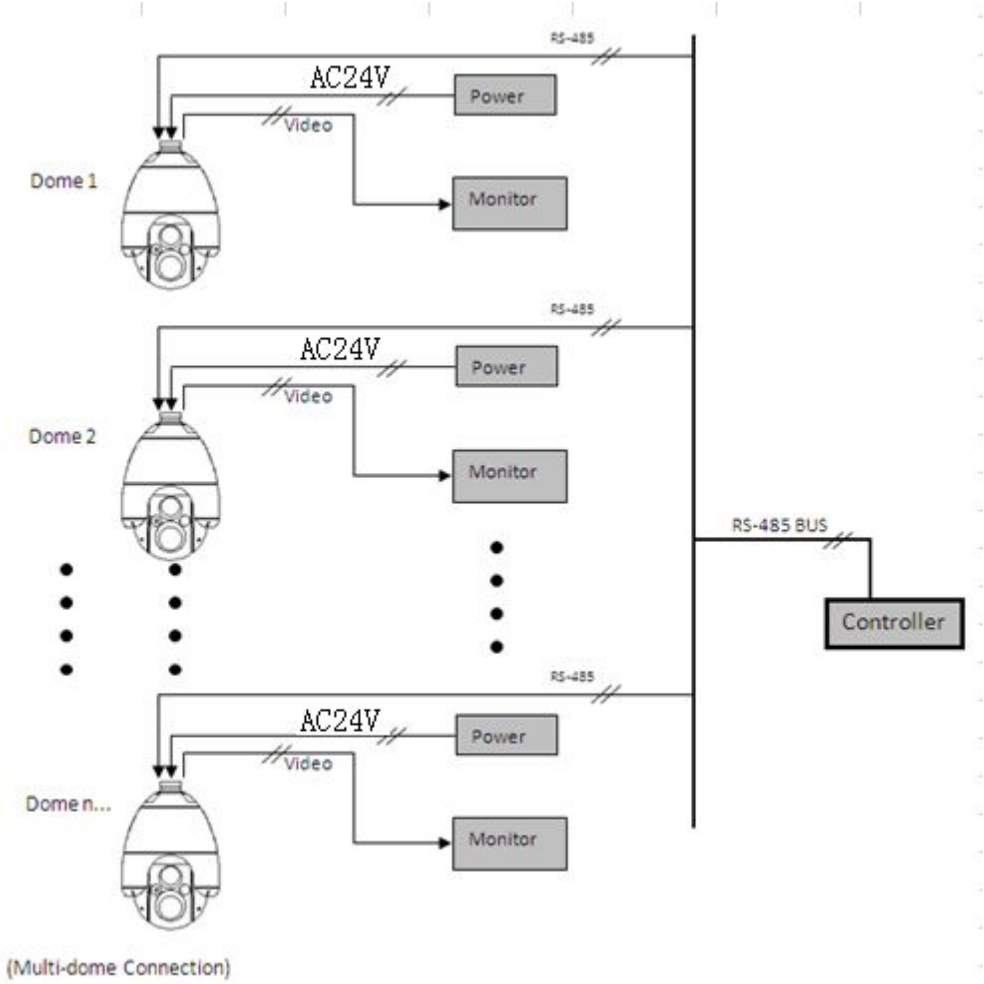

3.2.4 Remove the stainless steel slice of dome, and set dome address, protocol and baud rate on the main control board. There are 2 dip switches SW1 and SW2 on the main board. Please refer to 3.3 " Dip Switches" for how to set dome address, protocol and baud rate.

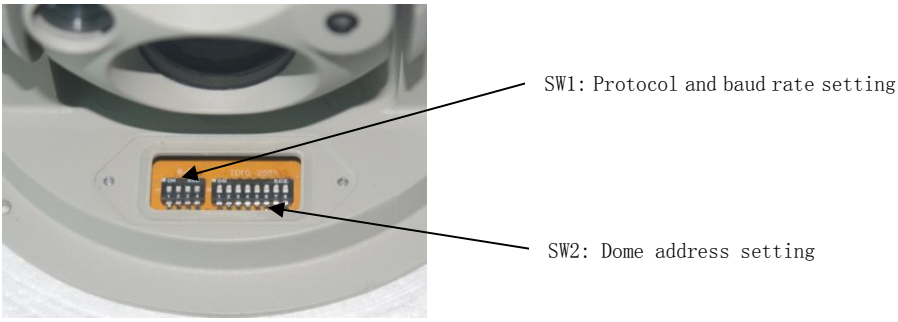

3.3 Dip Switches (Dome Address, Protocol and Baud Rate)

3.3.1 Protocol and baud rate (as shown in SW1)

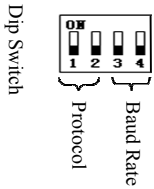

Protocol \ Dip Switch	1st Dip	2nd Dip
Auto	OFF	OFF
DYNACOLOR	ON	OFF

Baud rate \ Dip Switch	3rd Dip	4th Dip
2400	OFF	OFF
4800	ON	OFF
9600	OFF	ON
19200	ON	ON

Note: If you choose “Auto” in protocol, the dome can automatically recognize PELCO-D，PELCO-P，ULTRACK，VICON, etc. Make sure the dome and controller have the same protocol and baud rate, otherwise the dome can’t be controlled. The dome camera should be restarted if there is any change in the dip switches.

3.3.2.Dome address (as shown in SW2)

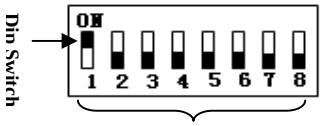

Dome Address
(This is Dome address of Dome 1)

Setting: to add together the corresponding numbers of those DIP at "ON", and you get the dome address.

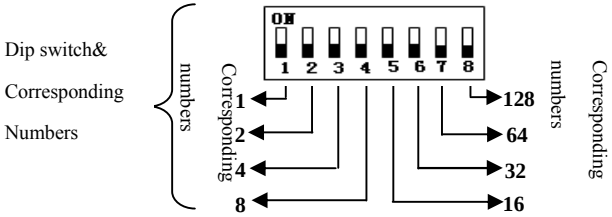

Dome Address counting example：

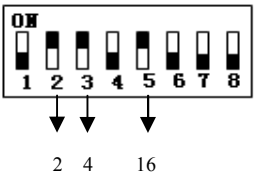

(2+4+16=22) Dome address is **22**.

Dome address：0～255

Note：The default factory setting is Auto (protocol), 2400bps (baud rate) and 1(dome address).

Chapter 4 Installation of Different Brackets

4.1 Dimensions

4.2 Wall Mount

4.3 Pending Mount

4.4 Corner Bracket

4.5 Pole Mount Adapter

4.6 Parapet Mount Adapter

4.1 Dimensions

4.1.1 PTZ-SDI606 Wall Mount Bracket

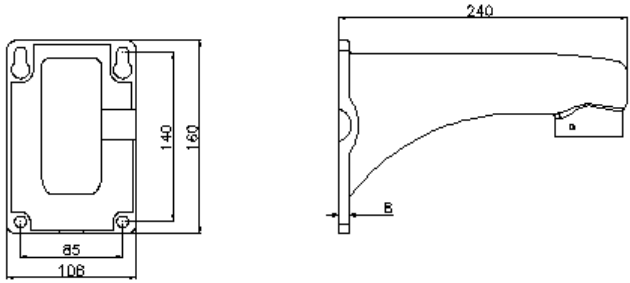

4.1.2 PTZ-SDI604 Pendant Bracket

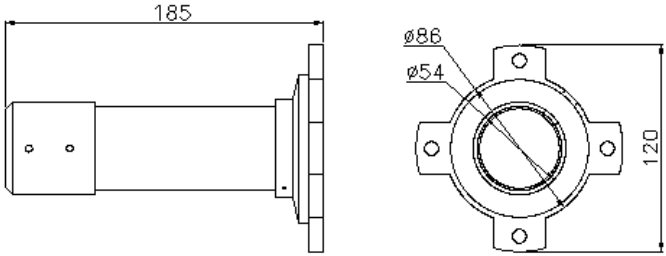

4.1.3 Corner Adapter

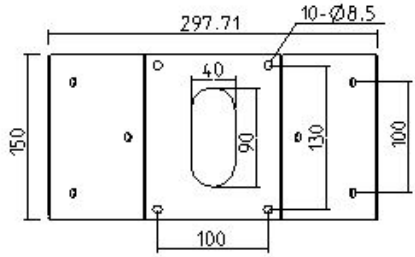

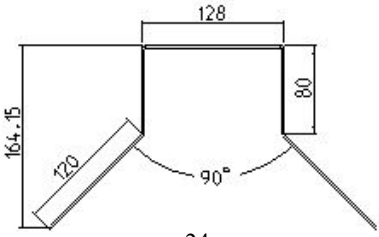

4.1.4 Wall Mount Adapter

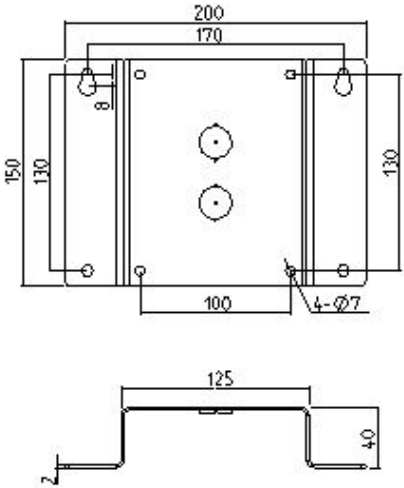

4.15 Pole Mount Adapter

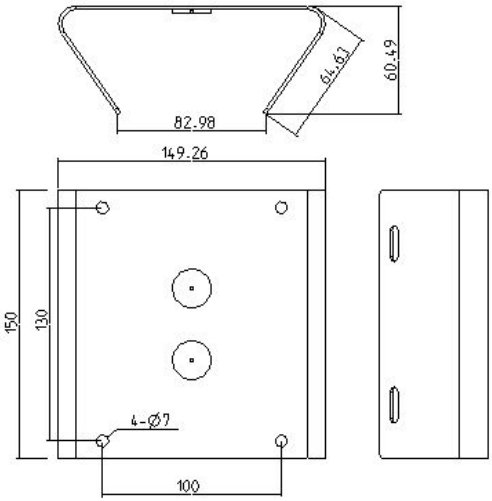

4.1.6 Parapet Adapter

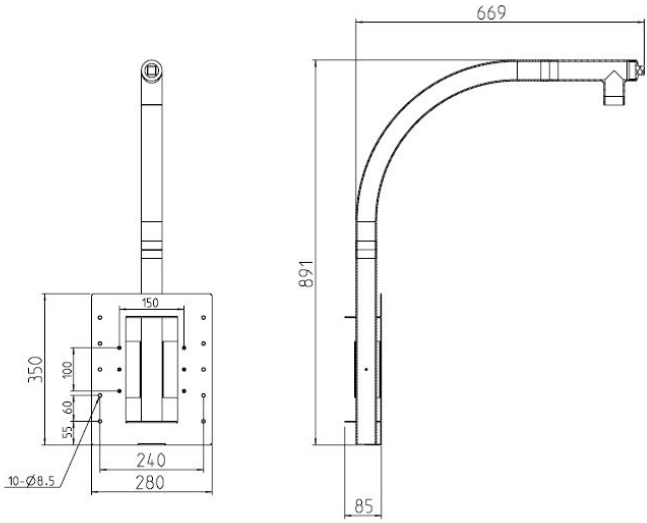

4.2 Wall Mount Installation

4.2.1 Accessories

（1）Wall Mount Bracket

To use with indoor and outdoor dome

Picture:

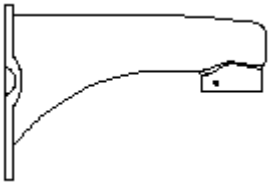

（2）Accessories

Bolts, Spring Washers and Plain Washers, Water-proof Washers（Prepared by user）

4.2.2 Installing Procedures

Wall Mount is applicable of indoor and outdoor hard walls. Installation requirements:

（1）The wall is thick enough to support the Bolts, Washers.

（2）The wall can endure at least 8 times of the weight of dome and all the accessories.

Procedure 1：Make a Hole and Fix the Anchor Bolts

Drill 4 holes on the wall according the dimension of wall mount bracket, and insert the M8 anchor bolts(Prepared by the user) into the holes.

Procedure 2：Run the BNC cable through the wall mount bracket.

Procedure 3：Fix the Wall Mount Bracket on the Wall

Fix the 4 M8 screw caps with plain washers, and then screw them with the corresponding anchor bolts on the wall (through the wall mount bracket and rubber washer).

Procedure 4：Dome Installation

Connect the top of dome housing with pendant bracket (connector) and fix by M5 screw. Then install the dome according to Chapter 3.

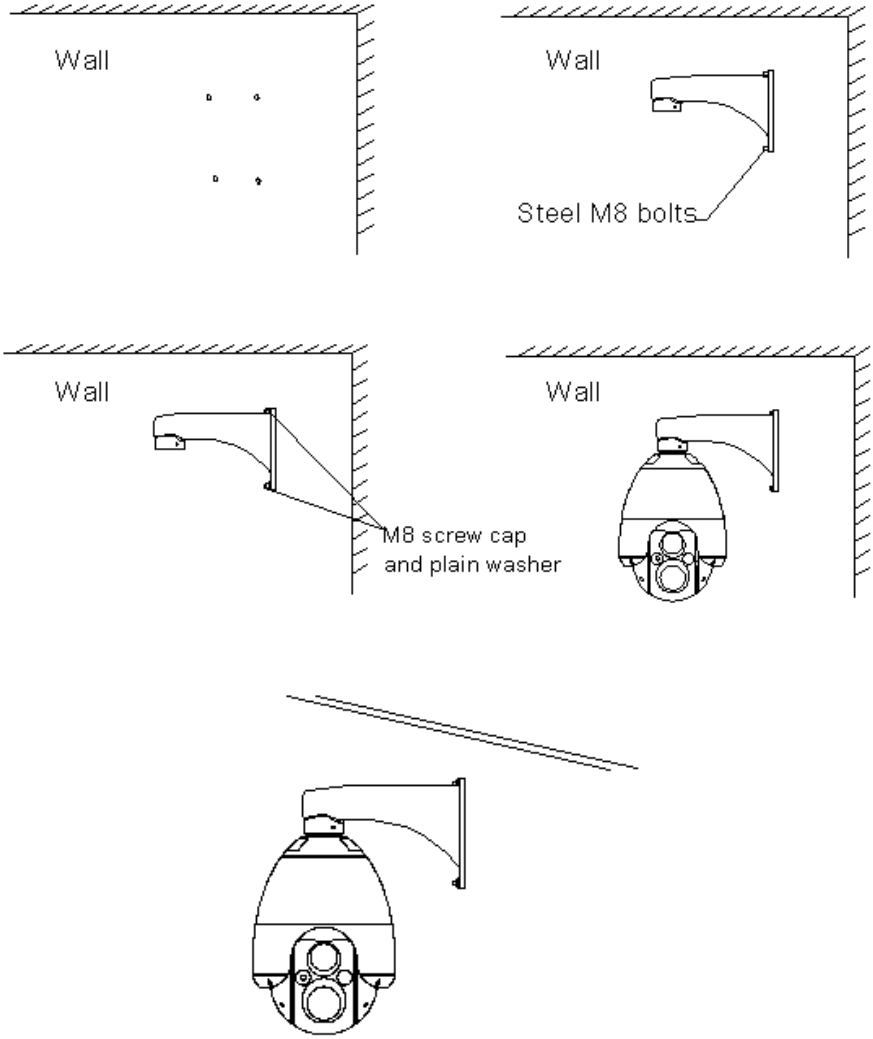
Wall
Wall
Steel M8 bolts
Wall
M8 screw cap
and plain washer
Wall

4.3 Pending Mount Installation

4.3.1 Accessories

（1）Pending Pan

Used for pending mount installation, should be used together with pipe and connector.

Picture：

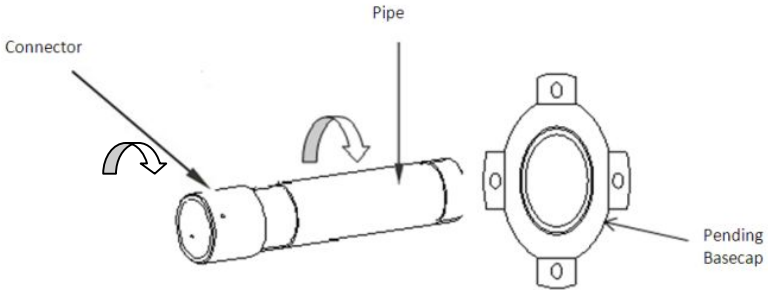

（2）Pipe

4.3.2 Pendant Mount Installation

Pendant mount is applied for hard ceiling. Installation Requirements:

（1）The wall is thick enough to support the Bolts, Washers.

（2）The wall can endure at least 5 times of the weight of dome and all the accessories.

Procedure 1：Install the Ceiling Pan

Make 4 holes on the ceiling (accordingly with the holes on the ceiling pan), insert the anchor bolts, then run the BNC cable through the ceiling pan. Then aim the 4 holes on the ceiling pan to the inserted anchor bolts, and fix with M6 screw.

Note：The length of BNC cable outside ceiling pan should be similar to length of pipe.

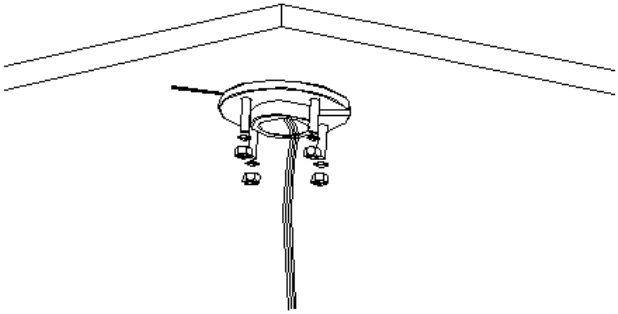

Procedure 2：Pipe Installation

Screw the pipe with the connector, and then run the BNC cable through the pipe and connector. Then fix the pipe with the ceiling pan with Screw.

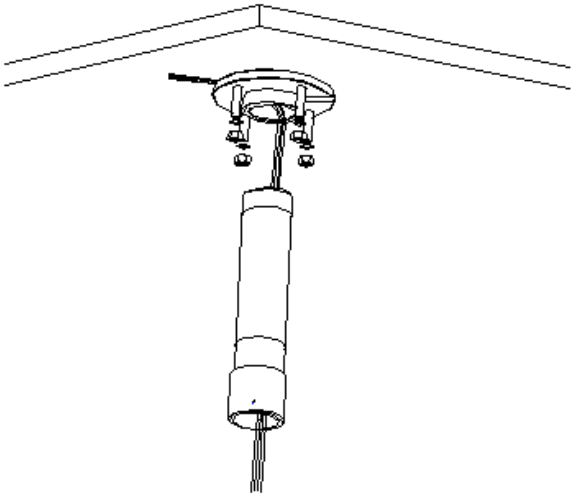

Procedure 3：Dome Installation

Connect the top of dome housing with pendant bracket (connector) and fix by M5 screw. Then install the dome according to Chapter 3.

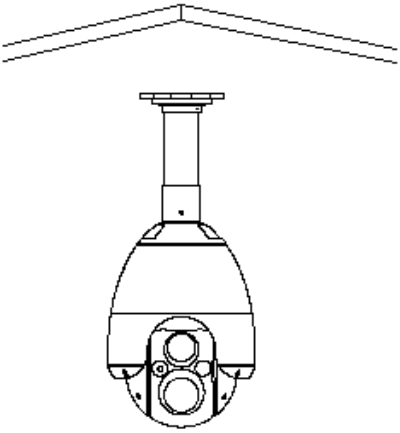

4.4 Corner Adapter Installation

4.4.1 Accessories

（1）Wall Mount Bracket

Applicable for the indoor and outdoor dome.

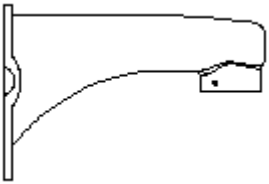

（2）Corner Adapter

Should be used together with the wall mount bracket.

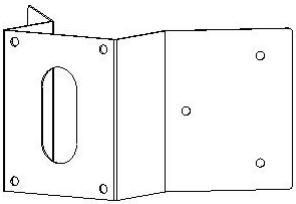

（3）Accessories

Screws, Hexagon Bolts M8, Spring Washers and Plain Washers（Prepared by user）

4. 4. 2 Installation Procedures

This is applicable for indoor and outdoor hard walls with 90-degree corner. Installation requirements:

（1）The wall should be thick enoPTZ-SDIh to support the anchor bolts.

（2）The wall can endure at least 8 times the weight of the dome and all the accessories.

Procedure 1：Install Corner Adapter

Picture:

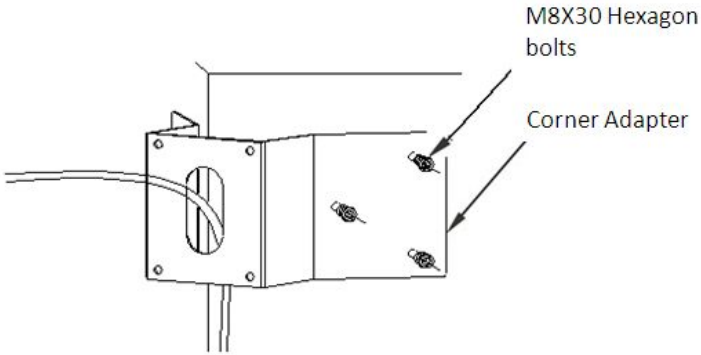

Mark and drill 6 holes on the wall accordingly with the holes of the corner adapter, and insert the M8 anchor bolts. Run the BNC cable through the center hole, and then fix the corner adapter to the anchor bolts by screw caps and washers.

Precaution：The Anchor Bolts are prepared by the user. Assure the cable is long enoPTZ-SDIh. If the dome is used outdoors, put glass glue to make it water proof.

Procedure 2：Install wall mount bracket to corner bracket.

Use the provided Bolts, Spring Washers and Plain Washers to mount the Wall Mount Adaptor onto the product (refer to following picture)

Picture：

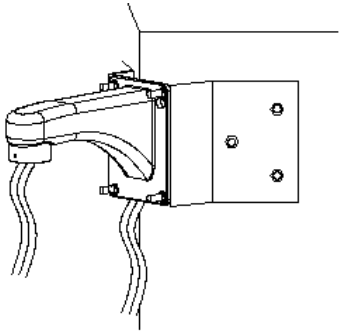

Note：when fastening the bolts, first press the washer firmly, then twist about half a circle. Thus can make it water-proof and also would not damage the bolts because of exceeded strength.

Procedure 3: Install the speed dome

Connect the top of dome housing with pendant bracket (connector) and fix by M5 screw. Then install the dome according to Chapter 3.

Picture：

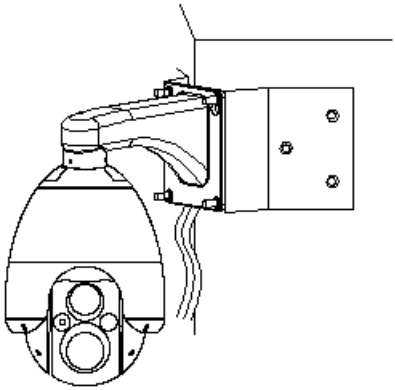

4.5. Pole Mount Adapter Installation

4.5.1. Consisting parts

（1）Wall mount bracket

To hold dome housing of indoor or outdoor dome

Picture：

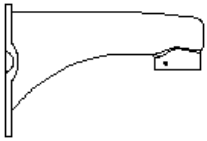

（2）Pole Bracket

The pole bracket should be used together with wall mount bracket.

Picture ：

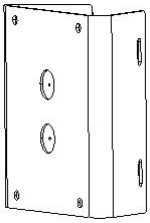

（3）Straps

Picture：

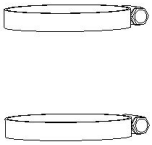

To use together with pole bracket, optional dimensions:

Φ59-82MM、Φ84-108MM、Φ103-127MM、Φ130-152MM、Φ155-178MM、Φ180-203MM、Φ194-216MM；or to choose other dimensions according to customers' requirements.

（4）Accessories for installation

Anchor bolts M6, Spring Washers（supplied by customer）

4.5.2 Procedures of pole bracket installation

The pole can be used on hard poles for both indoor and outdoor dome. The pole should apply to the following conditions:

（1）Dimension of pole should accord with that of the strap.

（2）Pole is strong enoPTZ-SDIh to hold at least 8 times of the weight of the dome and all the accessories.

Procedure1： Assembly of pole bracket

Insert the straps into the hole of the plate to assemble the pole bracket

Picture:

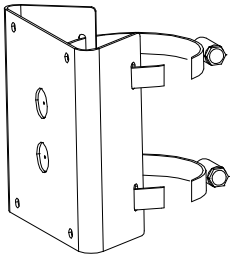

Procedure 2：Install Pole Bracket

Select a pole to install and confirm the installation height. Insert the cables through the Pole Mount Bracket.

Use the Strap to secure the Pole Mount Bracket.

Picture:

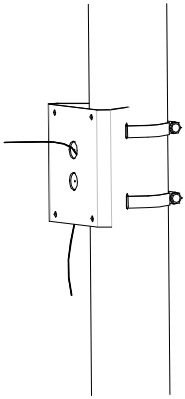

Note：if it’s used for outdoor dome, please make the connecting part of BNC cable and pole bracket waterproof.

Procedure 3：Install pole bracket with wall mount bracket

Use the provided Bolts, Spring Washers and Plain Washers to mount the Wall Mount Bracket with the Pole Bracket.

Picture:

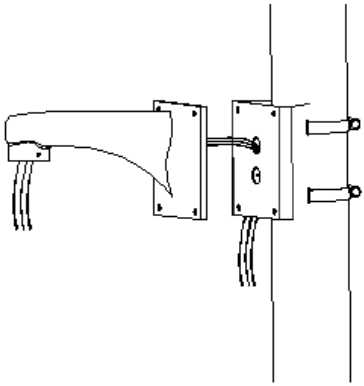

Procedure 4：Install Speed Dome

Connect the top of dome housing with pendant bracket (connector) and fix by M5 screw. Then install the dome according to Chapter 3.

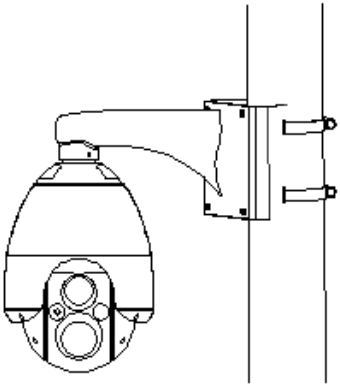

4.6 Parapet Mount Adapter

4.6.1 Parts：UV-PM Parapet Mount

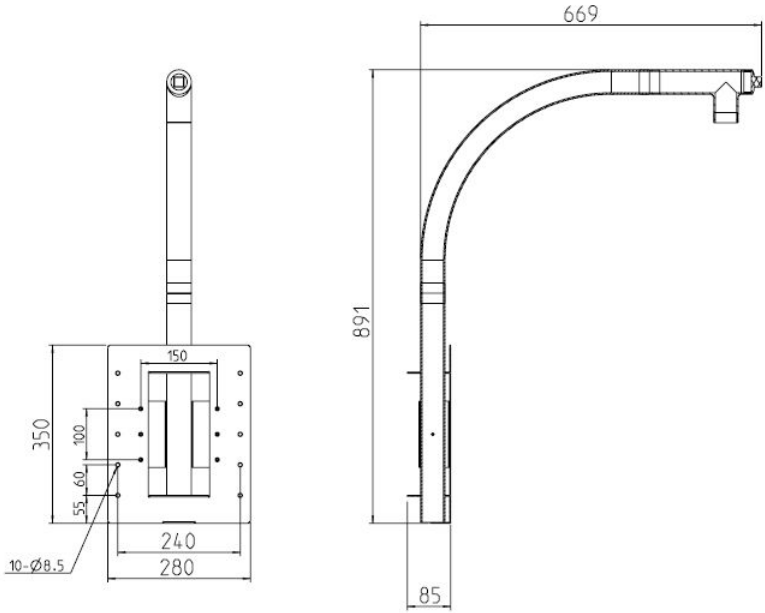

4.6.2 Accessories

Anchor Bolts M8, Plain Washer

4.6.3 Procedures to install Parapet Mount Bracket

This bracket is used on the hard and strong walls; the wall should apply to following conditions:

（1）the wall is thick enough for the anchor bolts

（2）the wall is strong enough to support 8 times of the weight of the products to be installed.

Procedure 1: Drill holes for anchor bolts

Select a location, Mark and drill 10 holes into the Mounting Plate and insert the Anchor Bolts or Nuts (M8) (anchor bolts are supplied by the user)

Procedure 2：Fix parapet mount bracket on the wall

Use the “Anchor Bolts or Nuts to secure the Mounting Plate to the wall.

Procedure 3: Install the speed dome

Connect the top of dome housing with pendant bracket (connector) and fix by M5 screw. Then install the

dome according to Chapter 3.

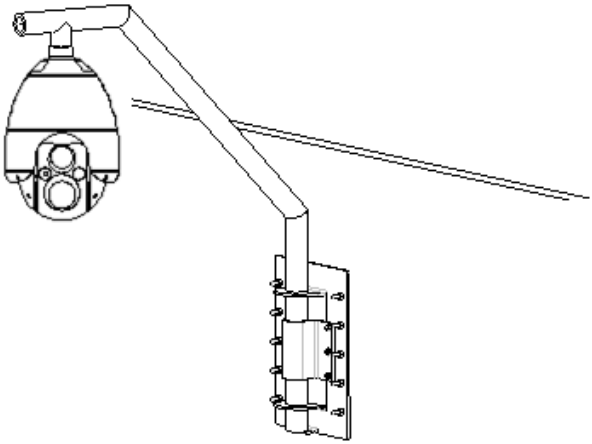

Chapter 5 Operation Guidance

5.1 Wiring (Do not connect to power)

(Please refer to 3.2.3)

5.2 Protocol and Baud Rate Setting (Do not set when dome is connected to power; dome should be restarted if there is any change in the setting)

(Please refer to 3.3.1)

The Dip Switch is on PCB Board inside the dome.

5.3 Dome Address Setting (Do not set when dome is connected to power; dome should be restarted if there is any change in the setting.)

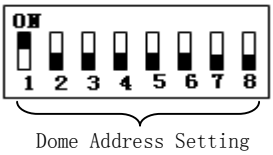

In left picture: Dome address is:1

(Please refer to 3.3.2)

The Dip Switch is on PCB Board inside the dome.

5.4 Connect to Power.

Now user can see self-checking of both dome (rotation) and board camera (you can see image on monitor).

5.5 Controller Setting

For the controller, the protocol, baud rate and address should be the same as the dome (please refer to the user manual of controller for the detailed setting)

Precaution: If the protocol of dome is “Auto”, then protocol of controller can be PELCO-D, PELCO-P, ULTRACK, VICON, etc, but baud rate and address should be the same as dome, otherwise the dome can’t be controlled.

5.6 Testing

Now user can start testing the dome if all the above is done.

1. Pan/Tilt Move Testing

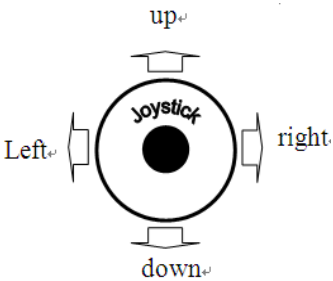

Can be realized by moving joystick left/right or up/down, as shown in following picture:

This means the dome works well.

2. Zoom Testing

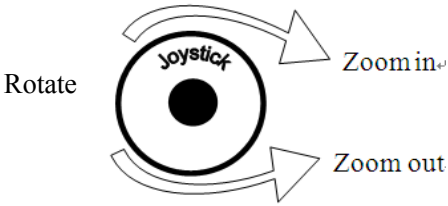

User can rotate joystick to zoom in and zoom out or to press the key TELE (Zoom In)and WIDE(Zoom Out) on the controller.

This means the communication of dome and board camera is good.

（For operations, please refer to the next Chapter for details.）

5.7 Finish Testing (Summary).

1. If everything normal in 5.6, it means the system works well. Please don't change the wiring or any setting, to avoid failure in system.
2. If there is any problem in 5.6, please check the wiring (5.1) and setting (5.2, 5.3 and 5.5) carefully.

Chapter 6 Operation in OSD Menu

6.1 The English OSD Menu

6.1.1 Main Menu

6.1.2 Menu Tree (Submenu)

6.1 Operations in the OSD Menu

6.1.1 Main OSD Display

<1>. Press **95+PREVIEW** in the keyboard to enter the OSD Display.

<2>. **Move joystick up and down to choose**, the item aimed by the arrow is the one been chosen. Press **move joystick left and right to enter** the chosen item and/or to change setting.

<3>. Press **IRIS-** to exit or return to previous item menu.

PTZ-SDI6	
1. LANGUAGE ENGLISH	<<Language Option
2. DISPLAY SETTING	<<Display
3. CONTROL SETTING	<<Control Setting
4. SYSTEM SETTING	<<System Setting
5. CAMERA SETTING	<< Camera Setting
6. FUNCTION EDITING	<< Function Editing
7. EXIT	

6.1.2 Menu Tree (Submenu).

All the submenus are clearly shown in this menu tree.

1. Language ENGLISH << Language Option **ONLY ENGLISH**

2. DISPLAY SETTING

1. CAMERA STATUS OFF /ON << Move joystick left&right to choose
2. COORDINATES OFF/ON << Move joystick left&right to choose
3. ZOOM MAG OFF/ON << Move joystick left&right to choose
4. INIT-INFO DISP ON/OFF << Move joystick left&right to enter
5. SYSTEM INFORMATION << Move joystick left &right to enter

SYSTEM INFORMATION

CAMEAR : FCB-EH7500

PROCOTOL: AUTO

BAUDRATE: 2400

ADDRESS : 001

RESOLUTION: 1080P25

SN : 94066995

VERSION : 1.0

IRIS OPEN TO RETURN

6.RETURN << Move joystick left &right to Exit

3. Control Setting <<Control Setting Move joystick left&right to enter

1. PAN AND TILT SETUP <<Pan/Tilt Setting Move joystick left&right to enter
   1. PAN REVERSE OFF/ON << Pan Reverse OFF/ON Move joystick left&right to choose
   2. TILT REVERSE OFF/ON << Tilt Reverse OFF/ON Move joystick left&right to choose
   3. -5 Tilt Limit OFF /ON <<-5 Tilt Limit OFF/ON Move joystick left&right to choose
   4. RETURN << Move joystick left&right to Exit
2. AUTO FLIP ON/OFF << Move joystick left&right to choose
3. SPEED LIMIT ON/OFF << Move joystick left&right to choose
4. VECTORSCAN AF OFF/ON << Move joystick left&right to choose
5. V-SCAN STILL OFF/ON << Move joystick left&right to choose
6. AUTO FOCUS PTZ/Z/OFF << Move joystick left&right to choose
7. AUTO AE PTZ/Z/OFF << Move joystick left&right to choose
8. RETURE << Move joystick left&right to Exit

4. SYSTEM SETTING <<System Setting Move joystick left&right to enter

1.RESOLUTION 1080P25 << Move joystick left&right to choose

NOTE: RESOLUTION settable 1080P/30, 1080P/25,720P/60,720P/50,1080I/60,1080I/50

2. CLEAR MEMORY << Clear Memory Move joystick left&right to enter

INITING。。。

3. RESTORE DEFAULT << Restore Def Setting Move joystick left&right to enter

PLEASE WAIT。。。

4. CAMERA RESET << Restart Move joystick left&right to enter

5. RETURN << Move joystick left&right to Exit

5. CAMERA SETTING << Move joystick left&right to enter

1. LENS SETTING << Move joystick left&right to choose

1. ZOOM SPEED 8 << Move joystick left&right to choose

NOTE: ZOOM SPEED 1----8

2. DIGIT ZOOM OFF/ON << Move Joystick left&right to choose

3. LENS INIT << Move joystick left&right to enter

4. RETURN << Move joystick left&right to Exit

2. CAMERA EXPOSURE << Move joystick left&right to enter

1. MODE AUTO << Move Joystick left&right to choose

NOTE: MODE :AUTO , MANUAL, SHUTTER PRIOR, IRIS PRIOR, BRIGHT PRIOR

2. IRIS AUTO << Move Joystick left&right to choose

NOTE: IRIS :AUTO ,F14,F11,F.6.9,F8,F6.8,F5.6,F4.8,F4,F3.4,F2.8,F2.4,F2,F1.6,CLOSE

3. GAIN

NOTE: 6DB,8DB,10DB,12DB,14DB,16DB,18DB,20DB,22DB,24DB,26DB,28DB

4. SHUTTER AUTO << Move Joystick left&right to choose

NOTE: SHUTTER:1/25,1/50,1/75,1/100,1/120,1/150,1/215,1/300,1/425,1/600,1/1000,1/1250, 1/1750,1/2500,,1/3500,1/6000,,1/10000,1/1,1/2,1/3,1/6,1/12

5. BRIGHT AUTO << Move Joystick left&right to choose

NOTE: BRIGHT:AUTO, 0---31

6. SLOW-SHUTTER OFF/ON << Move Joystick left&right to choose

7. EX-COMP LV 15 << Move Joystick left&right to choose

NOTE: EX-COMP LV 0----15

8.RETURN << Move joystick left&right to exit

3. WB MODE ATW << Move Joystick left&right to choose

(NOTE: WB MODE :ATW, AUTO,MANUAL,INDOOR,OUTDOOR,ONE PUSH)

4. R-GAIN 128 << Move Joystick left&right to choose

(NOTE: R-GAIN 0---255)

5. B-GAIN 128 << Move Joystick left&right to choose

(NOTE: B-GAIN 0---255)

6. MASK FUNCTION << Move Joystick left&right to choose

1.NUMBER 1 << choose masking zone Number Move Joystick left&right to choose

(NOTE: MASK NUMBER 1----24)

2. MASK EDIT << masking zone setting Move joystick left&right to enter

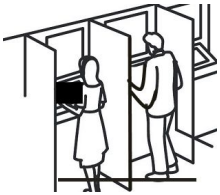

Catch which point to mask, press **IRIS+** start, under this display press NEAR（zoom out the tilt masking setting）、FAR key（to zoom in the tilt marking setting）、WIDE key （ to zoom out the pan masking setting）、TELE key（ to zoom in the pan masking setting），To adjust the masking size。Finish setting to press **IRIS-** exit to previous menu.

Press IRIS- to Exit

3..MASK DISPLAY OFF/ON <<masking display OFF/ON Move Joystick left&right to choose

4. MASK COLOR BLACK << masking color setting Move Joystick left&right to choose

（NOTE:Gray1、Gray 2、Gray 3、Gray 4、Gray 6、White、Red、Green、Blue、Cyan、Yellow、Magenta、Mosaic、Black）

5. TRANSPARENCY OFF/ON << Move Joystick left&right to choose

6. RETURN << Move joystick left&right to exit

7. OTHERS

1.SHARPNESS 9 << Move Joystick left&right to choose

(NOTE: SHARPNESS : 0---15)

2. BLC OFF/ON << Move Joystick left&right to choose

3. PICTURE FLIP OFF/ON << Move Joystick left&right to choose

4. LR-REVERSE OFF/ON << Move Joystick left&right to choose

5. RESOLUTION MODE L/H << Move Joystick left&right to choose

6. NR LEVEL 3 << Move Joystick left&right to choose

(NOTE: NR LEVEL : 0---15)

7.WDR OFF/ON << Move Joystick left&right to choose

8.MOTION DETECT NA

9. RETURN << Move **joystick left&right to exit**

8.RETURN << Move joystick left&right to exit

6. FUNCTION SETTING <<Function Editi Move joystick left&right to enter

1. PRESET << Preshot setup Move joystick left&right to enter

1. NUMBER 1---64 << Move Joystick left&right to choose

2.SET PRESET << Move joystick left&right to enter

STORED

IRIS CLOSE WHEN DONE

NOTE：Move joystick to position you want to set, press CLOSE to save and exit

3. CALL PRESET << Move joystick left&right to enter

4. DELETE PRESET << Move joystick left&right to enter

5. NAME: _ _ _ _ _ _ _ << Move joystick left&right to enter

NAME SETTING

NAME: _ _ _ _ _ _ _ _ _ _ _ _ _ _ << Move joystick up&down to choose

I

IRIS OPEN WHEN DONE

NOTE：Move joystick up&down to choose font, left&right to choose the position

6. NAME DISPLAY OFF/ON << Preshot Name Display Move joystick left&right to choose

7.RETURN << Move joystick left&right to choose

2.PATTERN << PTZ Tour Move joystick left&right to enter

1.NUMBER (1～ 6) << Tour Number Move joystick left&right to choose

2.PROGRAM << EDIT Move joystick left&right to enter

3.RUN << Move joystick left&right to enter

4. DELETE << Move joystick left&right to enter

IRIS OPEN TO BEGIN

IRIS CLOSE TO EXIT

PLEASE WAIT。。。。。。

5. NAME: _ _ _ _ _ _ _ _ _ _ _ _ _ _ _ << Move joystick left&right to enter

NAME SETTING

NAME: _ _ _ _ _ _ _ _ _ _ _ _ _ _ _ << Move joystick up&down to choose

I

IRIS OPEN WHEN DONE

NOTE：Move joystick up&down to choose font, left&right to choose the position

6. NAME DISPLAY OFF/ON << Move joystick up&down to choose

7.RETURN << Move joystick up&down to Exit

3.VECTORSCAN << Move joystick left&right to exit

1.NUMBER 1----7 << Move joystick left&right to choose

2.PROGRAM VECTORSCAN << Move joystick left&right to enter

1.SEQUENCE 1----16 << Move joystick left&right to enter

2.ELEMENT PRESET/VECTORSCAN/TOUR << Move joystick up&down to choose

3.ELEMENT NO. 1 << Move joystick left&right to enter

4. SPEED 6 << Move joystick up&down to choose

5. DEWELL 6 << Move joystick up&down to choose

6. RETURN << Move joystick up&down to Exit

3. RUN VECTORSCAN << Move joystick up&down to choose

4. DELETE VECTORSCAN << Move joystick up&down to enter

IRIS OPEN TO BEGIN

IRIS CLOSE TO EXIT

5. RETURN << Move joystick up&down to Exit

4.HOME FUNCTION << Move joystick up&down to enter

1.DEFAULT FUNCTION P/ V/T << Set Home Function Move joystick up&down to choose

(P：Preset/ V：Vector Scan (Preshot Tour)/ T：Tour(Pattern)

2.NUMBER 1 << Move joystick up&down to choose

3. DELAY 1-----255 << Move joystick up&down to choose

4.OPERATION OFF/ON << Move joystick up&down to choose

5.RETURN << Move joystick up&down to Exit

5.PAN SCAN SETUP << Move joystick up&down to choose

1.START POINTER << Move joystick up&down to enter

IRIS CLOSE WHEN DONE

2. END POINTER << Move joystick up&down to enter

IRIS CLOSE WHEN DONE

3. SCAN SPEED 3 << Move joystick up&down to choose

NOTE: SCAN SPEED 1----7

4. DIRECTION S-CIRCLE/ L-CIRCLE << Move joystick up&down to choose

5. RUN << Move joystick up&down to choose

6.RETURN << Move joystick up&down to Exit

6. AUTO SCAN SETUP << Move joystick up&down to choose

1. AUTO SCAN POS SET << Move joystick up&down to choose

IRIS CLOSE WHEN DONE

2. SCAN SPEED 3 << Move joystick up&down to choose

NOTE: SCAN SPEED 1----7

3. DIRECTION RIGHT/LEFT << Move joystick up&down to choose

4. RUN << Move joystick up&down to choose

5. RETIRN << Move joystick up&down to Exit

7. IRLED CONTROL << Move joystick up&down to enter

1.IRLED MODE AUTO /OFF/ON << Move joystick up&down to choose

2.THRESHOLD 10 Time Delay (Seconds) << Move joystick left&right to enter

NOTE: 3---25S

3.SENSITVITY (NA) << Move joystick up&down to choose

4.RETURN << Move joystick up&down to Exit

8.RETURN << Move joystick up&down to Exit

Appendix 1 Lightning and surge protection

Appendix 2 RS485 Bus Connection

Appendix 3 FAQs and solutions

Appendix 1 Lighting and surge protection

This product adopts TVS plate lightning protection technology to avoid damage caused by pulse signal that is below 3000W, like instantaneous lighting, surging, etc. According to the actual situation outdoors, necessary protection measures must be taken to secure the electrical safety.

1. The distance between signal transmission line and High-voltage equipment or high-voltage cable is at least 50m.

2. Outdoor wiring should better be along the eaves as much as possible.

3 In the open field, wiring should be buried underground in sealed steel pipe, and the steel-pipe should be one-point grounding. Overhead routing method is forbidden.

4. In strong thunderstorm area or high induction voltage areas (such as high-voltage transformer substation), high power lightning protection apparatus and lightning conductor are necessary to be appended.

5. The design for installation and wiring with lightning protection and grounding in mind should be combined with the lightning protection consideration of the building, and conform to the related national standards and industry standards.

6. The system should be equipotentially grounded, and the grounding equipment must satisfy double-request of system anti-jamming and electric safety, and it must not appear short circuit and open circuit with the zero conductor of strong grid. When the system is grounding individual, the resistance should be no more than 4Ω, the section al area of the grounding cable should be no less than $25mm^2$.

Appendix 2 RS485 Bus Connection

1. General Property of RS485 Bus

According to RS485 industry bus standard, RS485 is a half-duplex communication bus which has 120Ω characteristic impendence; the maximum load ability is 32 payloads (including controller device and controlled device).

2. RS485 Bus Transmission Distance

When using 0.75mm (24AWG) twisted-pair line, according to different baud rate, the max transmission distance theory table is shown as below:

Baud Rate	Max Distance
2400BPS	1800m
4800BPS	1200m
9600BPS	800m

The transmission distance will be decreased if we use the thinner cable, or use this product under the strong electromagnetic interference situation, or there are lots of devices are added to the bus; on the contrary, the transmission distance will be increased.

3. Connection Method and Terminal Resistance

1) RS485 industry bus standard require daisy-chain connection method between any devices, both sides have to connect a 120Ω terminal resistance

2) Connection of 120Ω terminal resistor

The 120Ω terminal resistor can be connected through the DIP switch on the communications board

4. Problems in the Practical Application

Normally, users adopt star-shape connection method in construction, under this situation, the terminal resistors must be connected between two farthest devices. But this connection method is not satisfy the requirement of the RS485 industry standard so that it will lead to some problems such as signal reflection, anti-jamming ability decline when the devices are faraway. At this time, the dome will be uncontrollable, or self-running, etc.

For such case, the best way is adding a RS485 distributor. This product can effectively change the star-shape connection to which satisfies the requirement of RS485 industry standard, in order to avoid those problems and improve the communication reliability.

Appendix 3 FAQ and solutions

No	Phenomenon	Possible causes	Solutions	Remark
1	No response after power-up,motors not locked, no display	Not connected do power	Check power connection AC24V	Please strictly follow the connection method of one-dome wiring
		Problem with power board	Change power board	
		Slipring cable was disconnected	Change slipring	
		Problem with master control board	Change master control board	
2	Dome rotates normally when start, without word or no image	Must connect with HD equipment	Refer to the wiring way in Page17 and Page18	Related to video cable and switch equipment
		Displaying equipment not support current video	Short cut command to switch the system of displaying equipment, please refer to Page8	
		HD-SDI video transmission distance too far	Video cable can transmit 90M-120M	
		Bad connection between board camera and dome	Change a new FPC cable(between board camera and dome) or a board camera	
3	Pan false when dome self-checking	Pan block blade and sensor not installed properly	Readjust the position of sensor	Pan block blade should be installed in the sensor slot 2/3 position
		Pan belt too loose	Readjust the position of pan motor	
4	After dome works normally, dome will rotate 360 degree when controlled,	Dome is doing self-correcting	Normal	It's abnormal if it happens very often, adjust the pan baffle or check if the mechanical parts are too tight
5	Tilt is not within 0 ---90 degree	Mistake in tilt positioning, camera may be baffled by something and thus start position too early	Check and readjust mechanical installation	
6	Normal self-checking, can	Wrong setting	Reset protocol, baud rate, address	

	be controlled	RS485 not connect well	Check connection	
7	Dome not respond good to keyboard	Communicate distance too long	Add driver	Usually it's the problem with the connection
		RS485 not connect well	Check wring	
		Slipping damaged	Change slipping	
		RS-485 protecting pipe damaged	RS-485 protecting pipe	
8	Dome work automatically after a certain period of time	Dome is set to call a function when there is no communication	Cancel this setting	
9	Same operation works for one dome, but not work with the other	Problem in setting or connection	re-set or check connection	
10	IR lamp not working	IR lamp is set to be OFF	Turn on IR lamp by setting 103 preshot;; call preshot 103 to set IR lamp as Auto; call preshot 104 to turn off IR	
		The cable of IR lamp is not well connected	Reconnect the cable	
		IR Lamp is destroyed	Change IR Lamp	
11	The IR night vision is not good	Check if the IR lamp and zoom module is on the same plane	Adjust the location of the zoom module	
12	OSD menu can display after self-check	Wrong operation	95+ PREVIEW to display OSD menu	After self-check, OSD menu can only display when there is image
		Problem with main control board	Change main control board	

Note: The cables may differ by different manufacture even with same model name; the above table is for reference of common cable.

PTZ-SDI6-E-0-001